LOGIC 5.0 COMMERCIAL DOOR OPERATOR

INDUSTRIAL-DUTY APPLICATIONS

FLOOR-LEVEL CHAIN HOIST
for Manual Operation in an Emergency

LARGER SECTIONAL OVERHEAD DOORS
Side Mounts to the Wall for Vertical or High-Lift Doors

ROLLING DOORS AND GRILLES
Wall or Hood Mounts

SMART

MyQ® TECHNOLOGY ENABLES MONITORING AND CONTROL OF THE FACILITY OPERATORS THROUGH A MOBILE APP.

GRID VIEW TO EFFICIENTLY MONITOR ALL THE DOORS IN THE FACILITY.

REAL-TIME ALERTS INDICATE THE STATUS OF DOORS VIA EMAIL OR PUSH NOTIFICATIONS.

CONNECTIVITY REQUIRES PURCHASE OF INTERNET GATEWAY (828LM) OR MyQ HOME BRIDGE (819LMB), SOLD SEPARATELY.

SAFE AND SECURE

SECURITY+ 2.0® SAFEGUARDS FACILITY ACCESS WITH ROLLING CODE TECHNOLOGY, OPENING FOR REGISTERED DEVICES ONLY.

TIMER-TO-CLOSE CAN BE PROGRAMMED TO CLOSE THE DOOR AFTER A SET AMOUNT OF TIME.

THE COMMERCIAL PROTECTOR SYSTEM® AUTO-REVERSES THE DOOR IF AN ENTRAPMENT PROTECTION DEVICE DETECTS AN OBSTRUCTION.

UL 325 REQUIRES ALL COMMERCIAL DOOR OPERATORS TO BE EITHER CONSTANT PRESSURE TO CLOSE OR BE EQUIPPED WITH A PRIMARY EXTERNAL MONITORED ENTRAPMENT DEVICE.

RELIABLE

CONTINUOUS-DUTY HIGH-STARTING TORQUE MOTOR PERFORMS IN DEMANDING INDUSTRIAL OVERHEAD AND ROLLING DOOR APPLICATIONS.

WARRANTY 2 YEARS.

BEYOND INDUSTRY STANDARDS: LIFTMASTER® IS COMMITTED TO QUALITY PRODUCTS, INNOVATIVE DESIGN AND COMPREHENSIVE SERVICES.

MONITORED ENTRAPMENT PROTECTION:

COMMERCIAL PHOTO EYES — CPS-U
Indoor use; NEMA 1 rated; max. range: 30 ft.

RETRO-REFLECTIVE PHOTO EYE — CPS-RPEN4
Photo eye and reflector with polarized beam; indoor/outdoor use; NEMA 4X rated; max. range: 50 ft.

DUAL-SIDED PHOTO EYES — CPS-OPEN4
Flexible rubber housings resist water spray and corrosion; indoor/outdoor use; NEMA 4X rated; max. range: 45 ft.

COMMERCIAL PROTECTOR SYSTEM — CPS-UN4
Heavy-duty industrial housings; indoor/outdoor use; NEMA 4 rated; max. range: 45 ft.

OPTICAL EDGE SYSTEM — OES
Infrared optical sensors in a customizable rubber enclosure are protected against water; indoor/outdoor use; NEMA 6 rated; max. range: 33 ft.

NON-MONITORED ENTRAPMENT PROTECTION:

LIGHT CURTAIN — LC-36A
Provides 36 inches of increased zone coverage for additional protection; indoor use; max. range: 33 ft.

TOTAL SOLUTION ACCESSORIES:

ENCRYPTED DIP 3-BUTTON, 3-COLOR REMOTE CONTROL — 813LM
Extreme-range remote programmable for open/close/stop operation.

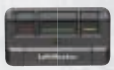

INTERNET GATEWAY — 828LM
Enables smartphone monitoring and control of each operator.

RED/GREEN TRAFFIC LIGHT — RGL-CTL
High-intensity LED lights indicate the door status for safe exit and entry in any light (TLS1CARD recommended).

LiftMaster offers accessory solutions for any commercial application. View the full product lineup at LiftMaster.com

LiftMaster®

MASTERFUL ENGINEERING.

MOTOR

- Available in 1/3, 1/2, 3/4 and 1 HP
- Instant Reverse and Overload Protection
- Capacitor Start on Single-Phase
- Removable without Affecting Limit-Switch Settings

POWER

- Dual-Voltage Connections
  - Single-Phase: 115V and 230V
  - 3-Phase: 208V, 230V and 460V
  - Discrete Model: 575V
- Customizable Voltage to Meet Job Requirements
- 5V DC NEC Class 2 Control Voltage

COMMERCIAL-GRADE DESIGN

- **Industrial Ball Bearings** on 1" Output Shaft
- **Floor-Level Disconnect** for Manual Lifting Operation in an Emergency
- **Floor-Level Disconnect and Chain Hoist** with Electrical Interlock for Hoist Operation in an Emergency
- **Standard Brake** on 3/4 and 1 HP Operators (Optional on 1/2 HP; Not Available on 1/3 HP)
- **Drive Reduction:** Heavy-Duty 5L V-Belt (First Stage); #48 Chain (Additional Reductions); #50 Output Sprocket Chain

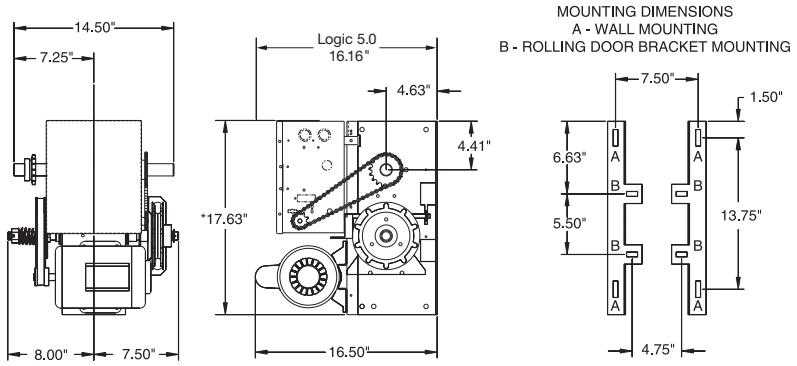

*FOR MODELS WITH BRAKES, ADD 2"
(BRAKE STANDARD ON 3/4 AND 1 HP, OPTIONAL ON 1/2 HP)

MAXIMUM DOOR AREA (SQ. FT.)

ROLLING		24 GA. STEEL	22 GA. STEEL	-	20 GA., 18 GA. STEEL	16 GA. STEEL	-
		ALUMINUM GRILLES	ALUMINUM DOORS	-	STEEL GRILLES	-	-
SECTIONAL		-	24 GA., 22 GA. STEEL	20 GA. STEEL	-	16 GA. STEEL	-
		FIBERGLASS	ALUMINUM DOORS	WOOD DOORS	-	-	-
		-	-	24 GA. STEEL INSULATED	-	20 GA. STEEL INSULATED	16 GA. STEEL INSULATED
HP	1/3	310	285	260	210	175	125
	1/2	400	350	320	280	250	200
	3/4	560	500	450	380	325	250
	1	640	625	560	475	400	310

STANDARD SPECS.

SECURITY+ 2.0® RADIO RECEIVER

ACCEPTS:
- (30) 3-Button Remote Controls or (90) 1-Button Remote Controls
- Additional 30 Wireless Keypads
- Unlimited DIP Switch Remotes

WIRING

- Control Function Selector Dial Allows Easy Selection of 7 Wiring Types to Meet Users' Needs
- C2 (Constant Pressure to Close) Wiring Preset
- Wiring Types B2, T, TS and FSTS Can Be Selected with the Addition of an Entrapment Protection Device
- Monitored Entrapment Protection Is Recommended When Using C2, D1 or E2
- Logic 5.0 Operators Only Accept UL-Approved LiftMaster® Entrapment Protection Devices

CONSTRUCTION

- NEMA 1 Type Electrical Box
- Heavy-Duty 11-Gauge Steel Frame with Durable Powder-Coated Finish
- All Reduction Sprockets Drilled and Pinned to Shafts
- Mid-Stop Enables Partial Openings to a Programmed Position for Environmental Control and Time Savings
- Adjustable Friction Clutch Protects the Door and Operator from Damage and Obstructions

MODIFICATIONS AND ACCESSORIES. BUILT FOR ANY APPLICATION.

- **Damp Environment (C-Prefix)**: Moisture-Resistant Electrical Box, Push-Button Control Station and Photo Eyes with TEFC Motor and without Solenoid Brake
- **TLS1CARD**: Timer Light Status Plug-In Option Card (Typically Used to Control Red/Green Traffic Light and Audible Devices)
- **AUXCARD**: Auxiliary Contacts Plug-In Option Card (with Relays That Change State While the Door Is Moving and When the Operator Is Powered Down)
- **Auxiliary Limits**: Auxiliary Limit Switches at Open and Closed Limits to Control Lights, Heaters, Dock Levelers and Other Auxiliary Devices

For more detailed information or to configure your model number, please visit Dealer.LiftMaster.com

© 2017 LiftMaster All Rights Reserved
300 Windsor Drive, Oak Brook, IL 60523
LiftMaster.com
UL and the UL logo are trademarks of UL LLC © 2017 All Rights Reserved.
LMCDENPG50OH 0717

LiftMaster®